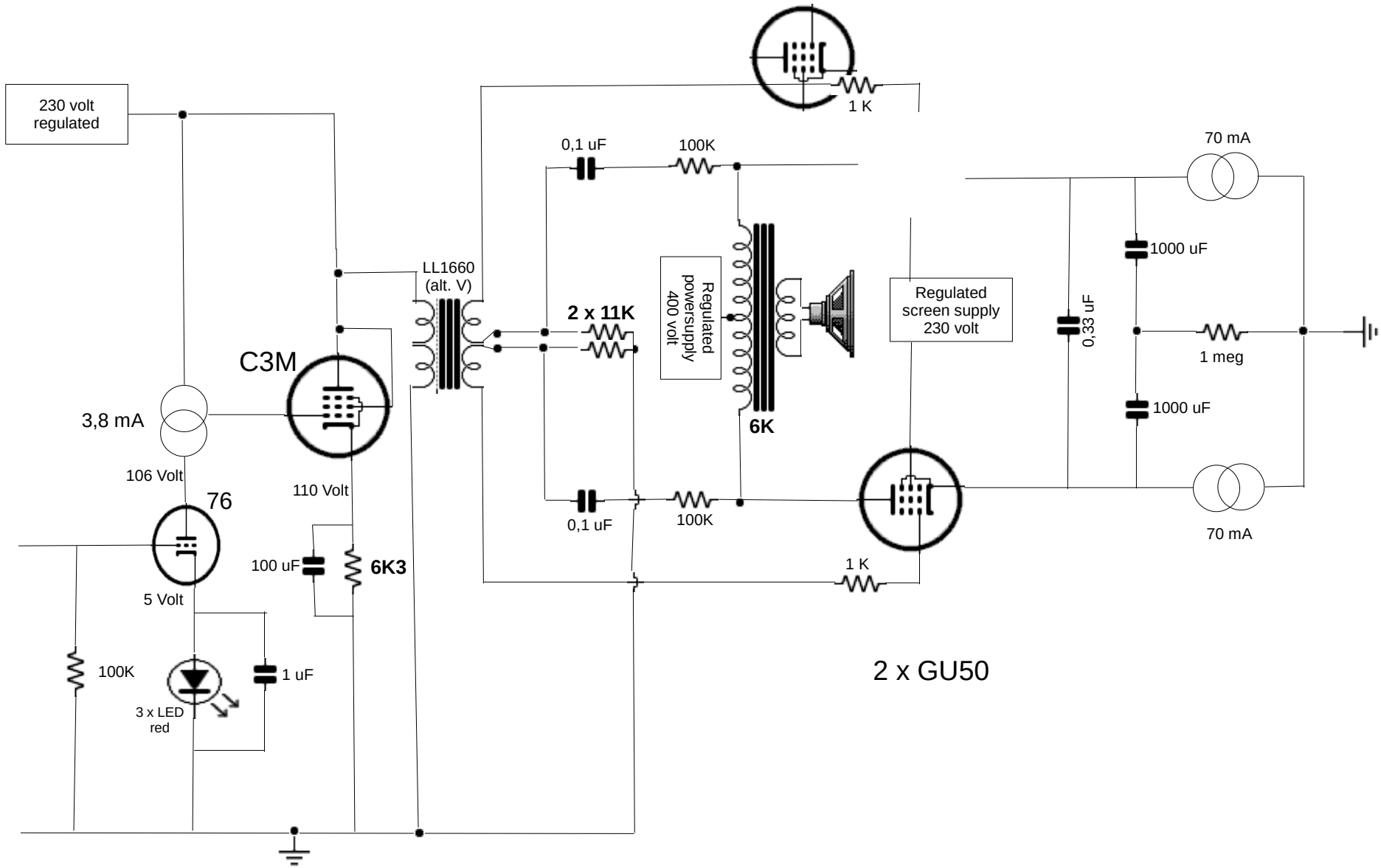

GU50 amp with local feedback
First trial