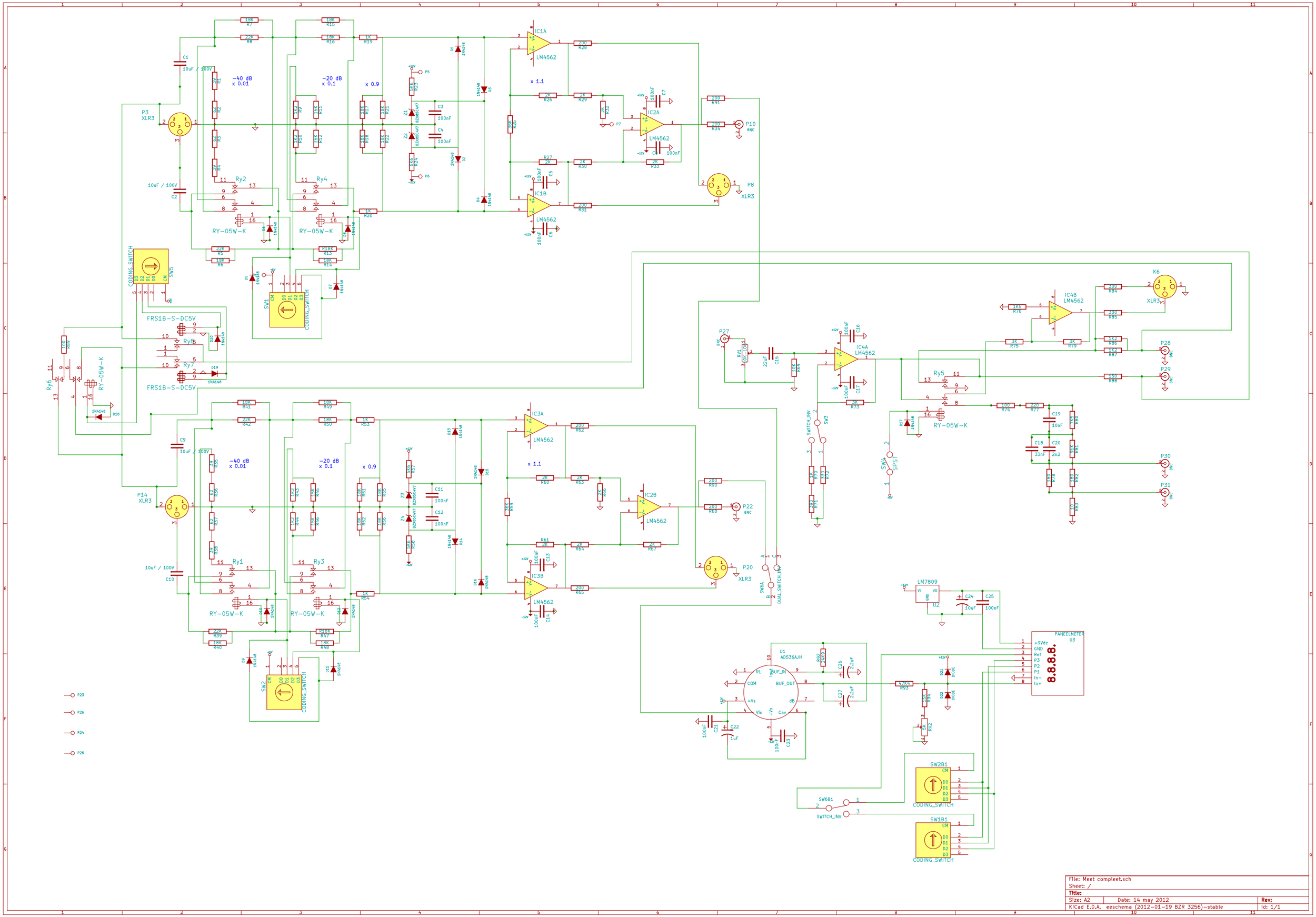
-40 dB
x 0.01
-20 dB
x 0.1
x 0.9
x 1.1
IC1A
IC1B
IC2A
IC2B
IC3A
IC3B
IC4A
IC4B
LM4562
LM7809
U1
AD536AJH
U2
U3
PANEELMETER
8.8.8.
P3
XLR3
P14
XLR3
P10
BNC
P8
XLR3
P20
XLR3
P22
BNC
P27
BNC
P28
BNC
P29
BNC
P30
BNC
P31
BNC
K6
XLR3
P23
P26
P24
P25
Ry1
Ry2
Ry3
Ry4
Ry5
Ry6
Ry7
Ry8
RY-05W-K
FRS1B-S-DC5V
CODING_SWITCH
SW1
SW2
SW3
SW4
SW5
SW6A
SW6B1
SW2B1
SW1B1
SWITCH_INV
DUAL_SWITCH_INV
SPST
BUF_IN
BUF_OUT
COM
RL
+Vs
-Vs
VIn
Cav
dB
GND
Ref
+9Vdc
In-
In+
File: Meet compleet.sch
Sheet: /
Title:
Size: A2
Date: 14 may 2012
Rev:
KiCad E.D.A. eeschema (2012-01-19 BZR 3256)-stable
Id: 1/1