RevNo	Revision note	Date	Signature	Checked

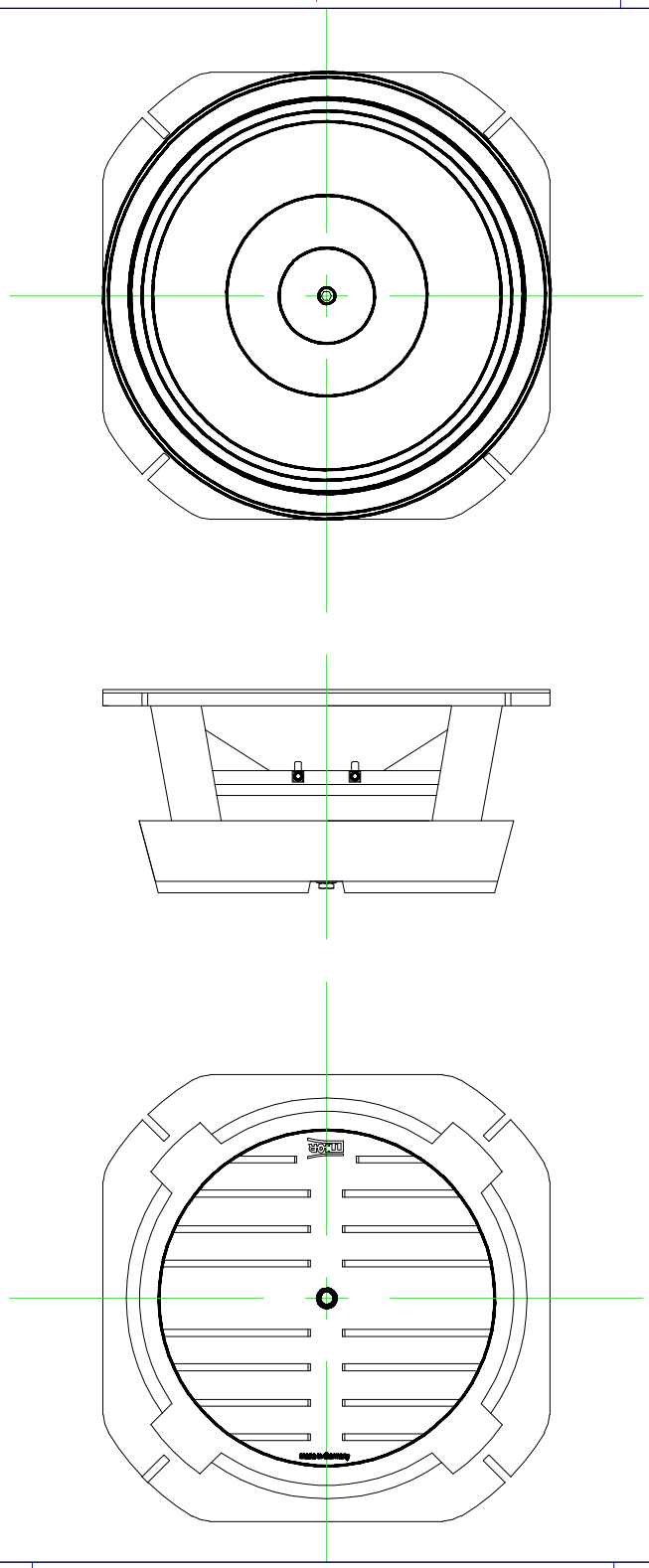

Itemref	Quantity	Title/Name, designation, material, dimension etc		Article No./Reference	
Designed by R. Geurts		Checked by R. Geurts	Approved by - date XXX - 00/00/00	File name Tho-3842	Date 23/11/07	Scale

Thorolf Hartung - Kester

THO-3842

01

Edition 1.0

Sheet 1/1