Adjustable Low Dropout Regulator with Kelvin-Sense Inputs

NOT RECOMMENDED FOR NEW DESIGNS
Contact Linear Technology for Potential Replacement

FEATURES

- Separate Sense Inputs Allow True Kelvin Sensing
- Easily Parallelable
- Operates Down to 1V Dropout
- Guaranteed Dropout Voltage at Multiple Current Levels
- 0.05% Line Regulation
- 0.1% Load Regulation at the Sense Point

APPLICATIONS

- High Efficiency Linear Regulators
- Post Regulators for Switching Supplies
- High Current Regulators
- Remotely Sensed Regulators

DESCRIPTION

The LT1087 is a variation of the LT1084 Adjustable Low Dropout 3 Terminal Regulator. The sense points of the internal reference/error amp are brought out to allow added flexibility.

They can be used for true Kelvin sensing of the output voltage at a remotely located load. They can be used to force the devices to share current equally when more than one device is wired in parallel, allowing the user to easily build higher current modules. This device is designed to provide 5A of output current. All internal circuitry is designed to operate down to 1V input to output differential and the dropout voltage is fully specified as a function of load current. On-chip trimming adjusts the reference voltage to 1%. Current limit is also trimmed, minimizing the stress on both the regulator and power source circuitry under overload conditions. A 10μF output capacitor is required on these devices; however, this is usually included in most regulator designs.

SIMPLIFIED SCHEMATIC

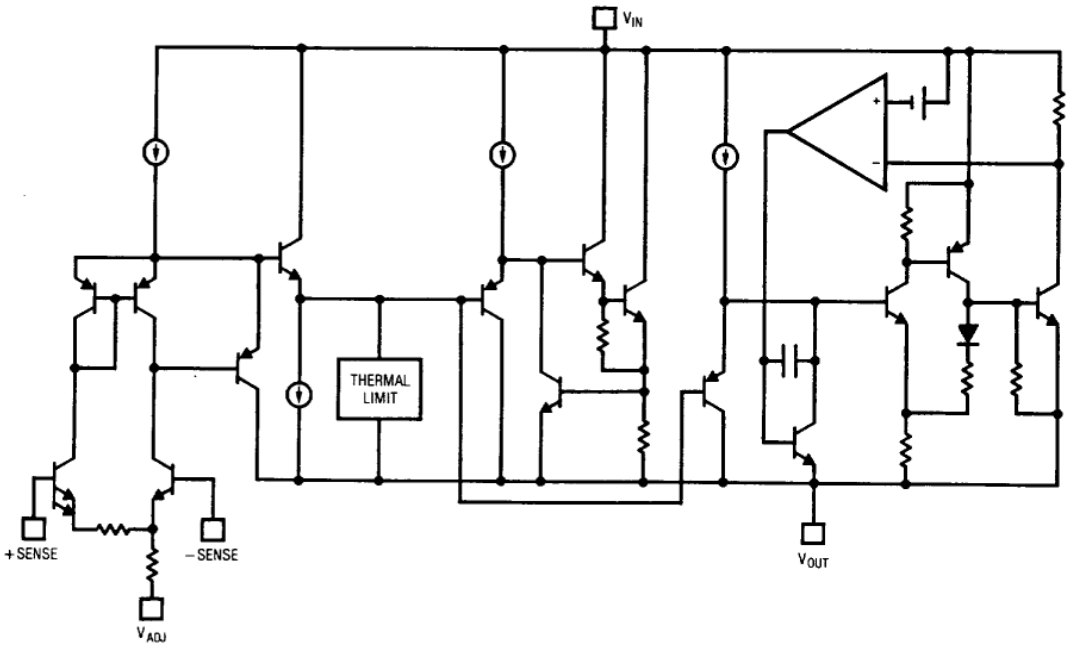

ABSOLUTE MAXIMUM RATINGS

Power Dissipation ..... Internally Limited
Input to Output Voltage Differential
"M" Grade 35V
"C" Grade 30V
Differential Voltage Between Sense Pins
($|V_{+SENSE} - V_{-SENSE}|$) 4V
Sense Pin Voltage
Range ..... $(V_{OUT}^* - 1V) \le V_{\pm SENSE} \le (V_{OUT}^* + 0.4V)$
Operating Junction Temperature Range
"M" Grade
Control Section ..... −55°C to 150°C
Power Transistor ..... −55°C to 200°C
"C" Grade
Control Section ..... 0°C to 125°C
Power Transistor ..... 0°C to 150°C
Storage Temperature ..... −65°C to 150°C
Lead Temperature (Soldering, 10 sec) ..... 300°C

*V_{OUT} is referring to the regulator output pin voltage.

PACKAGE/ORDER INFORMATION

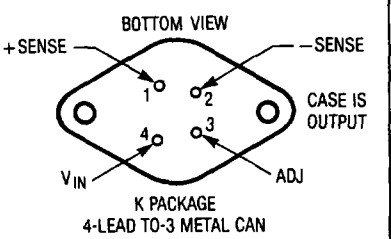

K PACKAGE
4-LEAD TO-3 METAL CAN

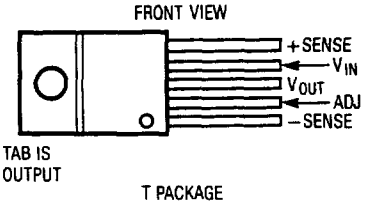

T PACKAGE
5-LEAD TO-220

ORDER PART NUMBER
LT1087MK LT1087CK
LT1087CT

PRECONDITIONING

100% Thermal Limit Burn-In

ELECTRICAL CHARACTERISTICS (See Note 1)

PARAMETER	CONDITIONS		MIN	TYP	MAX	UNITS
Reference Voltage	$I_{OUT} = 10mA$, $T_j = 25°C$, $(V_{IN} - V_{OUT}) = 3V$		1.238	1.250	1.262	V
	$10mA \le I_{OUT} \le 5A$, $1.5V \le (V_{IN} - V_{OUT}) \le 25V$	●	1.225	1.250	1.270	V
Line Regulation	$I_{LOAD} = 10mA$, $1.5V \le (V_{IN} - V_{OUT}) \le 15V$, $T_j = 25°C$			0.015	0.2	%
		●		0.035	0.2	%
	M Grade $15V \le (V_{IN} - V_{OUT}) \le 35V$	●		0.05	0.5	%
	C Grade $15V \le (V_{IN} - V_{OUT}) \le 30V$ (Notes 1, 2)	●		0.05	0.5	%
Load Regulation	$(V_{IN} - V_{OUT}) = 3V$, $10mA \le I_{OUT} \le 5A$, $T_j = 25°C$ (Notes 1, 2)			0.1	0.3	%
		●		0.2	0.4	%
Dropout Voltage	$\Delta V_{REF} = 1\%$, $I_{OUT} = 5A$, (Note 4)	●		1.3	1.5	V
Common Mode Range of Sense Pins ΔV_{REF}	$(V_{OUT} - 1V) \le V_{+SENSE} \le V_{OUT}$			0.4		mV
Differential Gain of Sense Pins $\Delta V_{REF}/\Delta V_{SENSE}$	$V_{+SENSE} = V_{OUT}$, $V_{-SENSE} = (V_{OUT} - 40mV)$			11		V/V
Sense Pin Bias Current				0.3		μA
Minimum Load Current	$(V_{IN} - V_{OUT}) = 25V$	●		5	10	mA
Thermal Regulation	$T_A = 25°C$, 30ms pulse			0.003	0.015	%/W

ELECTRICAL CHARACTERISTICS (See Note 1)

PARAMETER	CONDITIONS		MIN	TYP	MAX	UNITS
Ripple Rejection	f = 120Hz C_{ADJ} = 25μF, C_{OUT} = 25μF Tantalum I_{OUT} = 5A, (V_{IN} − V_{OUT}) = 3V	●	60	75		dB
Adjust Pin Current	T_j = 25°C			55		μA
		●			120	μA
Adjust Pin Current Change	10mA ≤ I_{OUT} ≤ 5A 1.5V ≤ (V_{IN} − V_{OUT}) ≤ 25V	●		0.2	5	μA
Temperature Stability		●		0.5		%
Long Term Stability	T_A = 125°C, 1000 Hrs.			0.3	1	%
RMS Output Noise (% of V_{OUT})	T_A = 25°C 10Hz = ≤ f ≤ 10kHz			0.003		%
Thermal Resistance Junction to Case	K Package: Control Circuitry/Power Transistor T Package: Control Circuitry/Power Transistor				0.75/2.3 0.65/2.7	°C/W °C/W

The ● denotes the specifications which apply over the full operating temperature range.

Note 1: See thermal regulation specifications for changes in output voltage due to heating effects. Load and line regulation are measured at a constant junction temperature by low duty cycle pulse testing. Unless otherwise specified, + Sense, − Sense and V_{OUT} are tied together at the package.

Note 2: Line and load regulation are guaranteed up to the maximum power dissipation (45W for the LT1087K, 30W for the LT1087T). Power dissipation is determined by the input/output differential and the output current. Guaranteed maximum power dissipation will not be available over the full input/output voltage range.

Note 3: Load regulation is defined to be the change in output voltage at the sense point. The sense point is defined to be the point at which the sense pins, output, and the top of the resistive divider that sets the output voltage are tied together. The voltage drop from the output pin of the device to the sense point must be < 1V.

Note 4: Dropout voltage is specified over the full output current range of the device. Test points and limits are shown on the Dropout Voltage curve. Dropout voltage is defined to be the voltage from input to output and is tested with the sense pins tied to the output pin.

TYPICAL PERFORMANCE CHARACTERISTICS

LT1087 Dropout Voltage

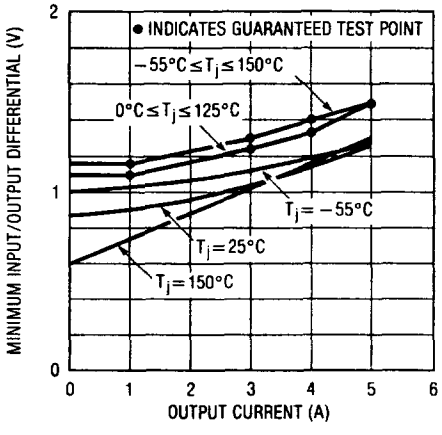

LT1087 Short Circuit Current

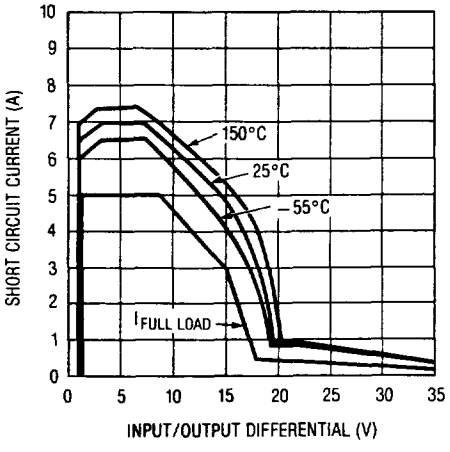

LT1087 Load Regulation

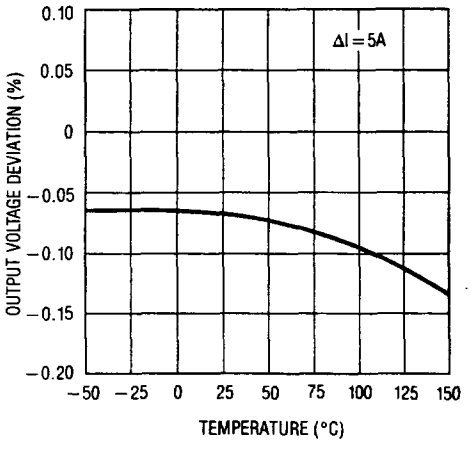

TYPICAL PERFORMANCE CHARACTERISTICS

LT1087 Ripple Rejection

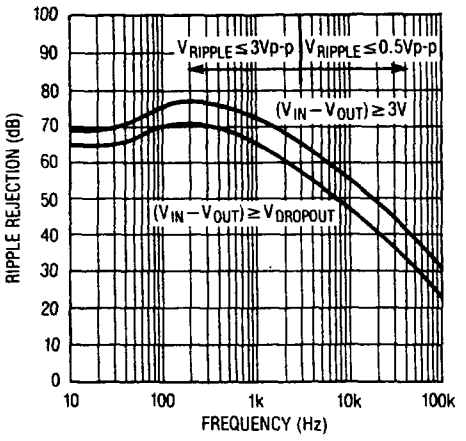

LT1087 Ripple Rejection vs Current

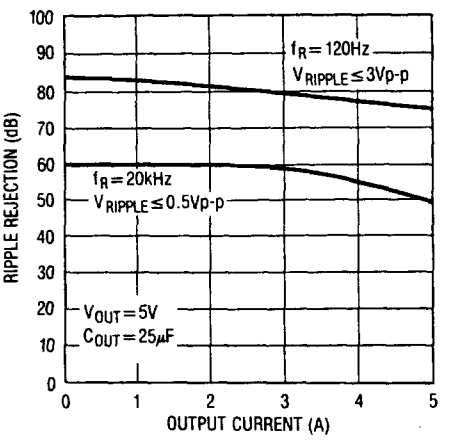

LT1087 Maximum Power Dissipation*

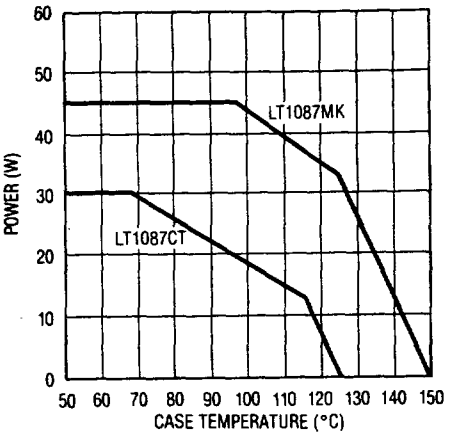

*AS LIMITED BY MAXIMUM JUNCTION TEMPERATURE

Minimum Operating Current

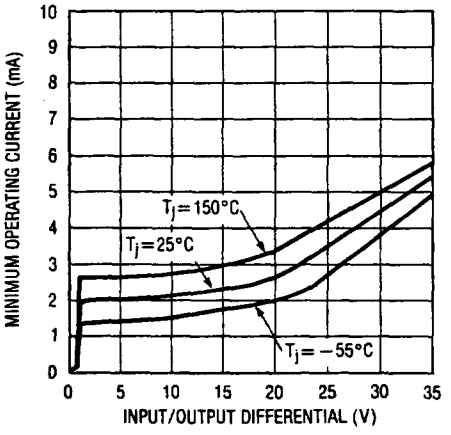

Temperature Stability

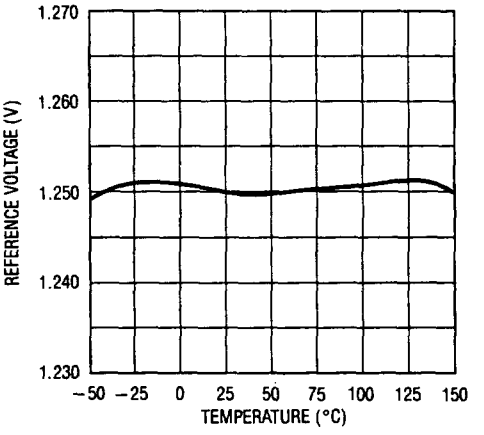

Adjust Pin Current

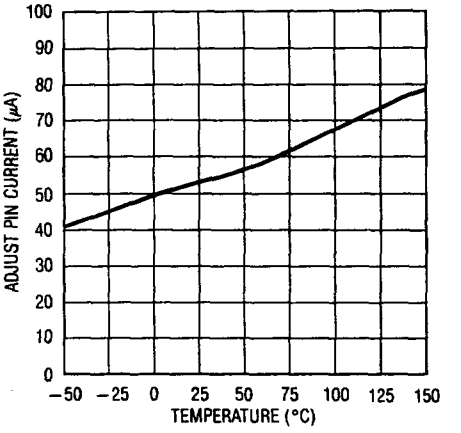

APPLICATION HINTS

The LT1087 is an adjustable voltage regulator with Kelvin sense inputs. These inputs can be used to fully Kelvin sense a remote load so that the regulation at the load is nearly perfect. The sense inputs can also be used in a 2-wire configuration to compensate for voltage drops in long output leads eliminating the two extra wires needed for full Kelvin sensing.

This regulator is easy to use and has all the protection features that are expected in high performance voltage regulators. They are short circuit protected, have safe area protection as well as thermal shutdown to turn-off the regulator should the temperature exceed about 165°C.

Sense Inputs

In a three terminal regulator the sense inputs are terminated at the output pin of the device (normally the case for adjustable regulators). This means that regulation will be best at the case of the device. Any wire resistance between the regulator and the actual load will degrade the regulation, especially at high currents. This five pin configuration allows the user to select the point where regulation will be optimized.

APPLICATION HINTS

The sense pins can be used in two basic configurations. They can be used to make a remote Kelvin sensed output, or they can be used as a differential amplifier to simply compensate for a long wire run.

For full Kelvin sensing of the output, the sense pins are tied together, then connected through a 1k resistor to the top of the R1/R2 divider that sets the output voltage. The 1k resistor is necessary to prevent high currents from flowing into the sense pins under fault conditions and will cause no significant error in the output voltage. The top and bottom of the R1/R2 divider are then tied to the points in the circuit where optimum regulation is desired. These connections must be made separate from the wires that carry the main load current. See the Remote Kelvin Sensed Output Circuit in the Typical Applications Section. At light load currents the voltage drop down the output lead will be small and the sense pins will be at approximately the same voltage as the output pin. For heavy load currents the output pin will be driven positive with respect to the sense pins by the value of the voltage drop across the output leads and the voltage at the sense points will be regulated. The output is allowed to go 1V above the sense pins in this configuration. For output pin voltages greater than 1V above the sense pins some degradation in regulation will occur. Since the output is allowed to go positive with respect to the sense pins by 1V and assuming that both the power lead to the load and the ground return are approximately equal, this configuration allows the user to have almost perfect regulation at the sense point with 2V of drop in the wire leads between the regulator and the load. Note that the input voltage to the regulator must provide enough headroom to the regulator to allow this to happen. The input voltage must be greater than the total of the regulated output voltage plus the wire drops plus the dropout voltage of the regulator (≈1.5V for LT1087 at 5A).

If the user does not want to run the extra two wires required for full Kelvin sensing, a second method can be used to compensate for wire drops. The sense inputs can be considered to be the inputs to a differential amplifier with a gain of 11 when the +Sense pin is positive with respect to the –Sense pin. Pulling the –Sense pin negative with respect to the +Sense pin (with the +Sense pin tied to the output) by 10mV will cause the reference voltage, nominally 1.25V, to increase by 110mV to 1.36V. The output of the regulator would then increase by the factor

$$\left[\Delta V_{REF}\left(1+\frac{R2}{R1}\right)\right].$$

See the Remote Load Regulation Compensation Circuit in the Typical Applications. In this manner sensing across a small part of the output leads can compensate for the entire length. The maximum differential input voltage over which the differential gain holds true is 60mV at 25°C, and this voltage is proportional to absolute temperature. For most circuits the differential input voltage should be less than 40mV. Exceeding this small differential voltage will not damage the device until the differential exceeds 5V. Regulation, however, will be degraded. Assuming a maximum differential input voltage of 40mV and an output voltage of 5V, and using the formula from the Remote Load Regulation Compensation Circuit, this configuration can compensate out 1.76V of wire drop. For higher output voltages larger wire drops can be compensated out. As in the previous circuit the input voltage to the regulator must provide enough headroom for this to happen.

Output Voltage

The LT1087 develops and tries to maintain a 1.25V reference voltage between its sense pins and its adjust pin (see Figure 1). By placing a resistor between the device's sense point (the end of R3) and its adjust pin, a constant current is caused to flow through R1 and down through R2 to set the overall output voltage. Normally R1 is chosen so that the current flowing through it is equal to the specified minimum load current of 10mA. Because I_{ADJ} is very small and constant when compared with the current through R1, it represents a small error and can usually be ignored.

APPLICATION HINTS

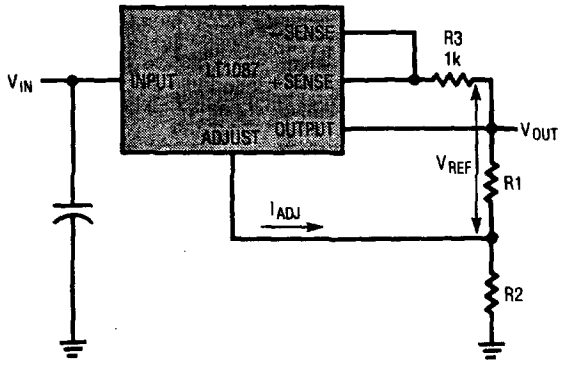

$$V_{OUT} = V_{REF}\left(1 + \frac{R2}{R1}\right) + I_{ADJ} \bullet R2$$

Figure 1. Standard Connection

TYPICAL APPLICATIONS

4

Remote Kelvin Sensed Output (4-Wire)

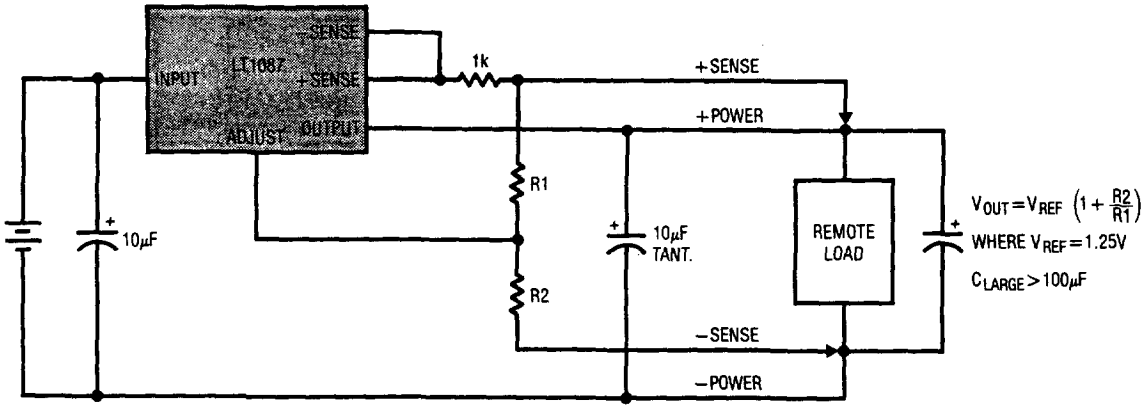

TYPICAL APPLICATIONS

Remote Load Regulation Compensation (2-Wire)

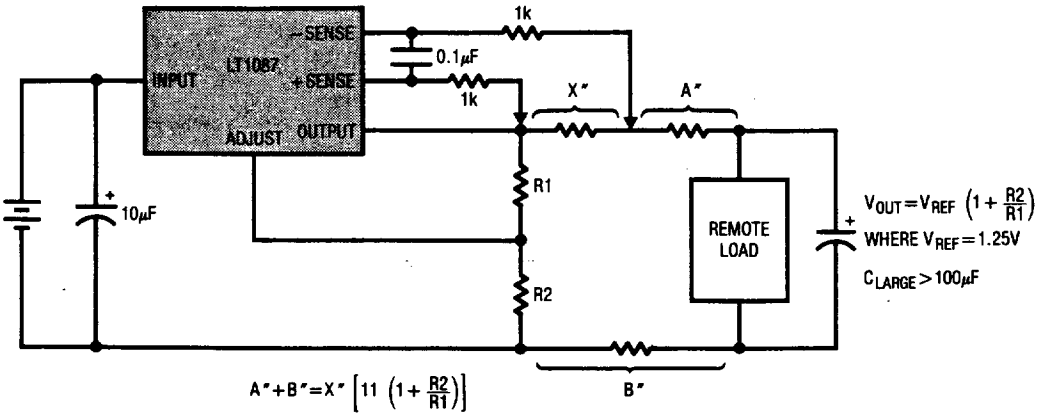

EXAMPLE: IF THE LOAD MUST BE LOCATED
10 FT. (120″) FROM THE REGULATOR
AND V_{OUT} IS 5V

THEN (A″+B″) = 240″ R1 = 120Ω, R2 = 360Ω

$$X''=\frac{(A''+B'')}{\left[11\left(1+\frac{R2}{R1}\right)\right]}\rightarrow X''=5.2''$$

BY CONNECTING THE –SENSE PIN 5.2″ FURTHER DOWN THE OUTPUT WIRE THAN THE +SENSE PIN THE LOAD REGULATION CAUSED BY 20′ OF WIRE CAN BE COMPENSATED OUT.

Paralleling Devices for Higher Current

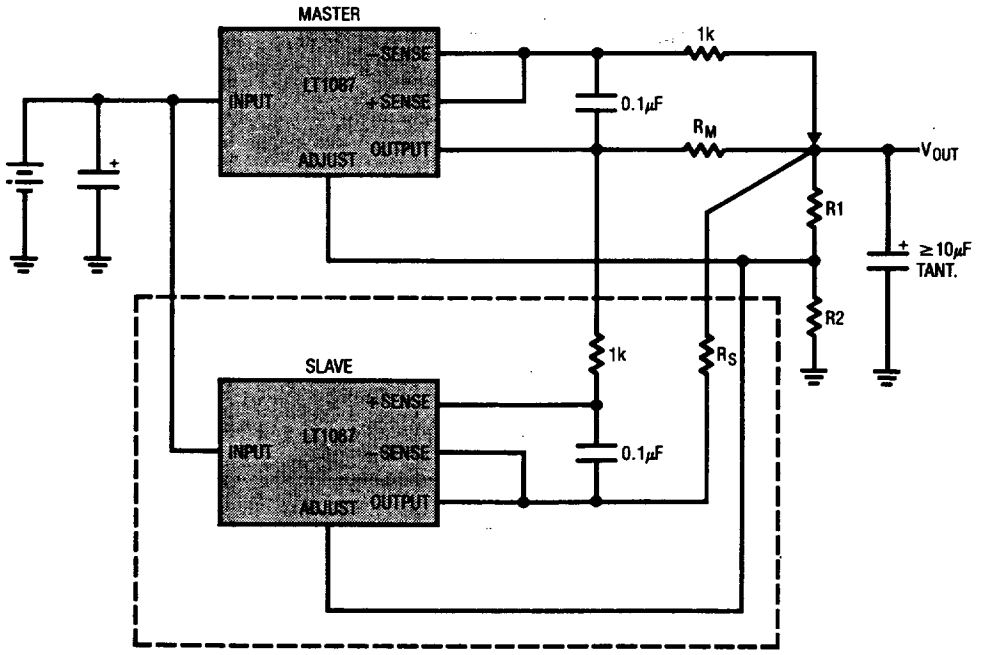

FOR PARALLELING MORE THAN TWO DEVICES — DUPLICATE SLAVE SECTION.

MINIMUM LOAD CURRENT = (10mA) (# OF DEVICES IN PARALLEL)
R1, R2 NETWORK CAN BE USED AS THE MINIMUM LOAD

R_M = 8mΩ ≈ 10″ OF #20 A.W.G. SOLID WIRE (COPPER)
R_S = 7.3mΩ ≈ 9.1″ OF #20 A.W.G. SOLID WIRE (COPPER)

R_M AND R_S SHOULD BE NON-INDUCTIVE. THIS IS EASILY ACCOMPLISHED BY FOLDING THE WIRE BACK UPON ITSELF SO THAT THE FIELDS GENERATED, BY CURRENT FLOWING IN THE WIRE, CANCEL.

This datasheet has been download from:

www.datasheetcatalog.com

Datasheets for electronics components.