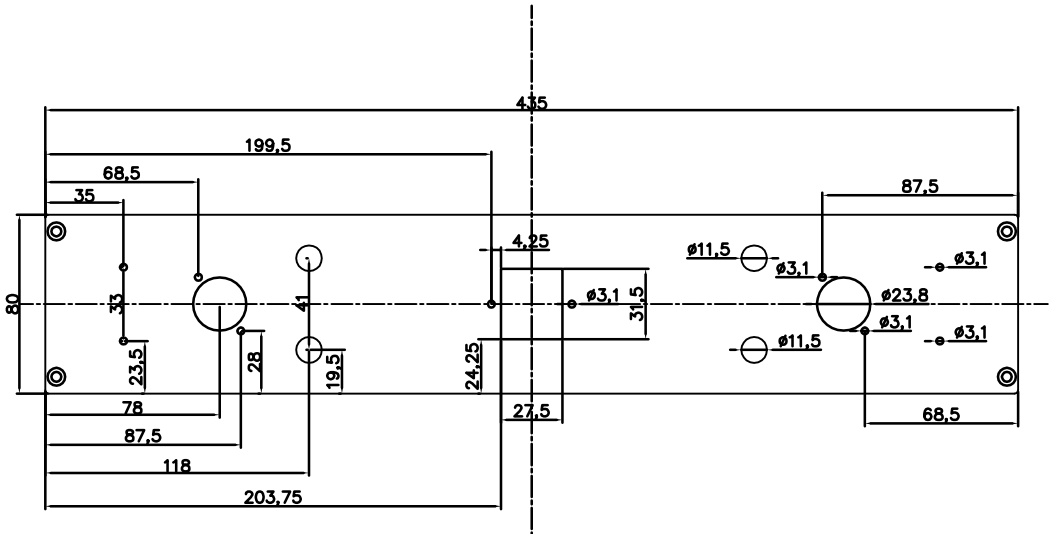

rear pannel 3mm

cover pannels 3mm

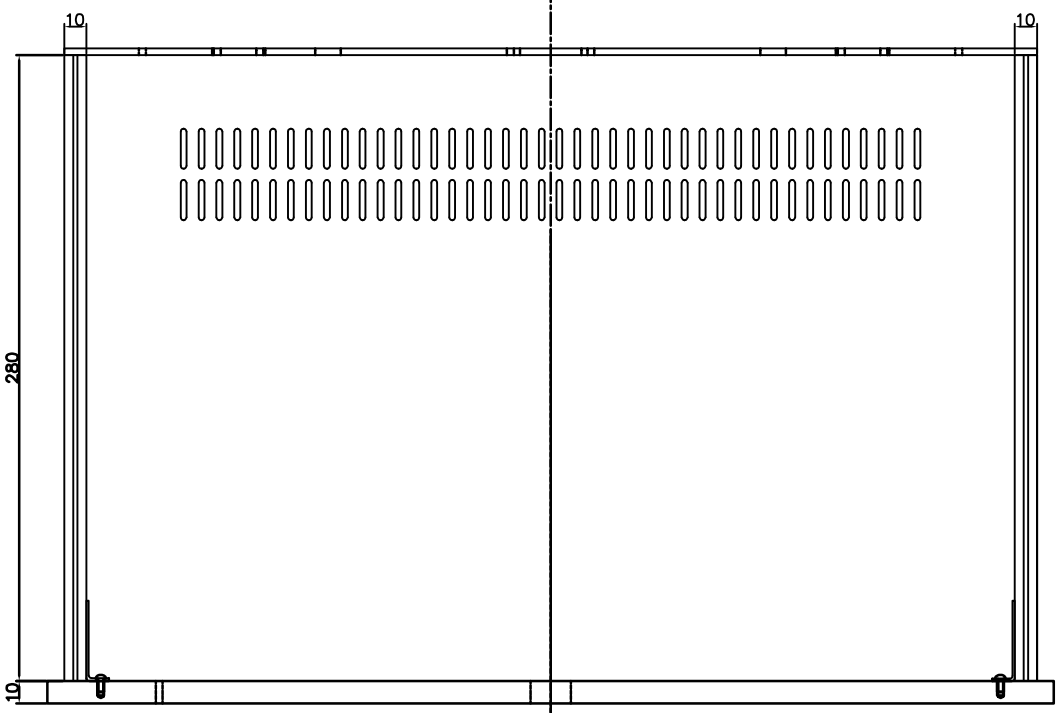

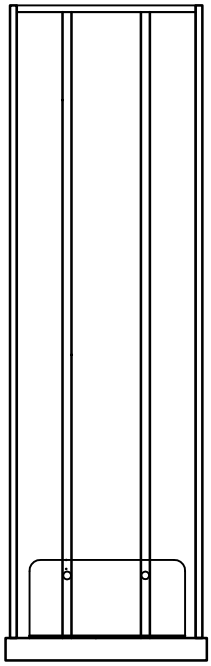
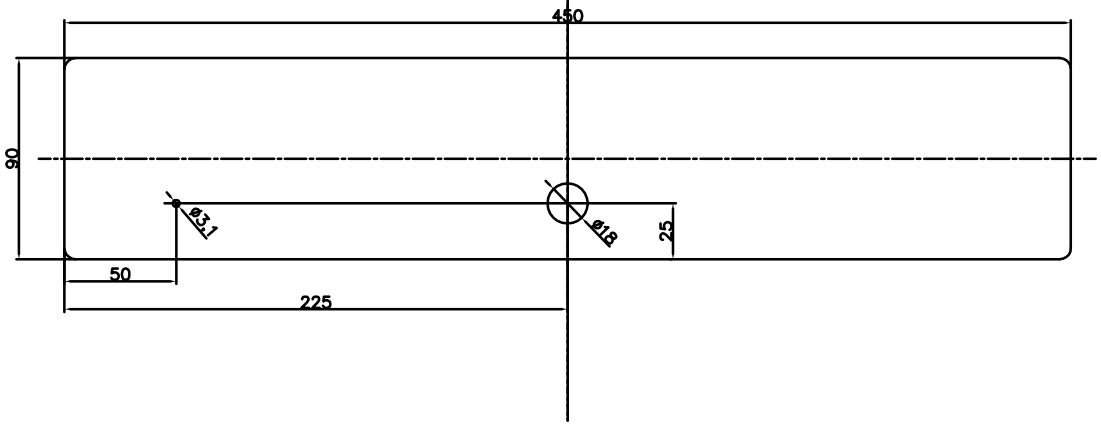
front pannel 10mm