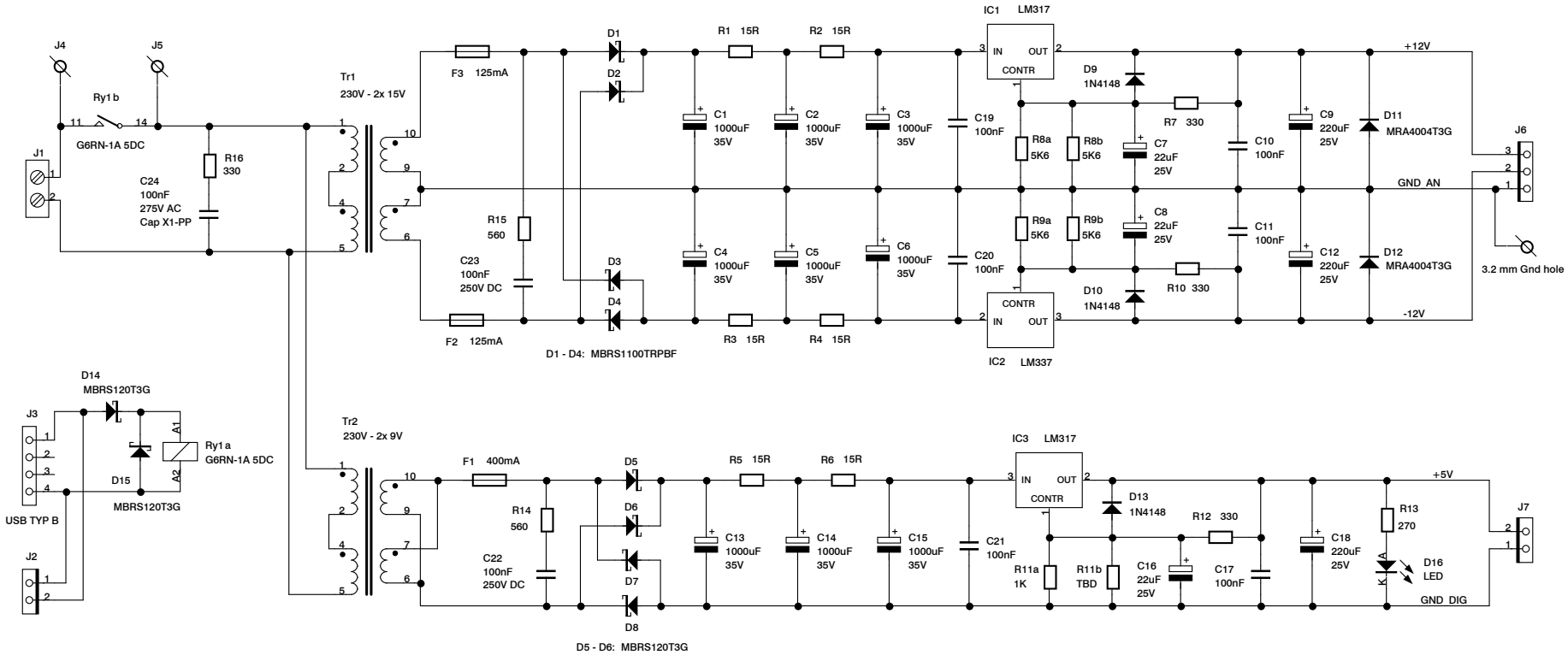

DAC Power Supply

Project :	S/PDIF DAC	Page 1 of 1 Pages
File :	PSU.cct	Time : 21:40:43
Created by :	P. de Jong	Date : 11-10-2009
Modified by :	&Modeng	Date : 7-1-2010
Revision :	1.00	