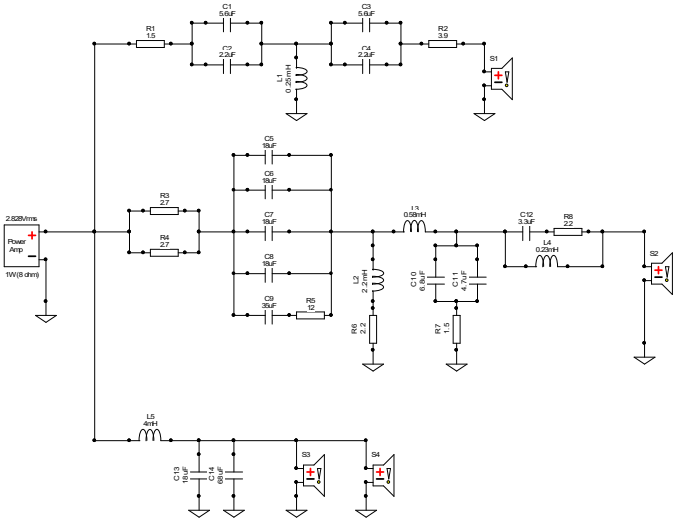
2.828Vrms
Power Amp
1W(8 ohm)
R1 1.5
C1 5.6uF
C2 2.2uF
L1 0.33mH
C3 5.6uF
C4 2.2uF
R2 3.9
S1
R3 2.7
R4 2.7
C5 18uF
C6 18uF
C7 18uF
C8 18uF
C9 36uF
R5 12
L2 2.2mH
R6 2.2
L3 0.68mH
C10 6.8uF
C11 4.7uF
R7 1.5
C12 3.3uF
R8 2.2
L4 0.22mH
S2
L5 4mH
C13 18uF
C14 68uF
S3
S4