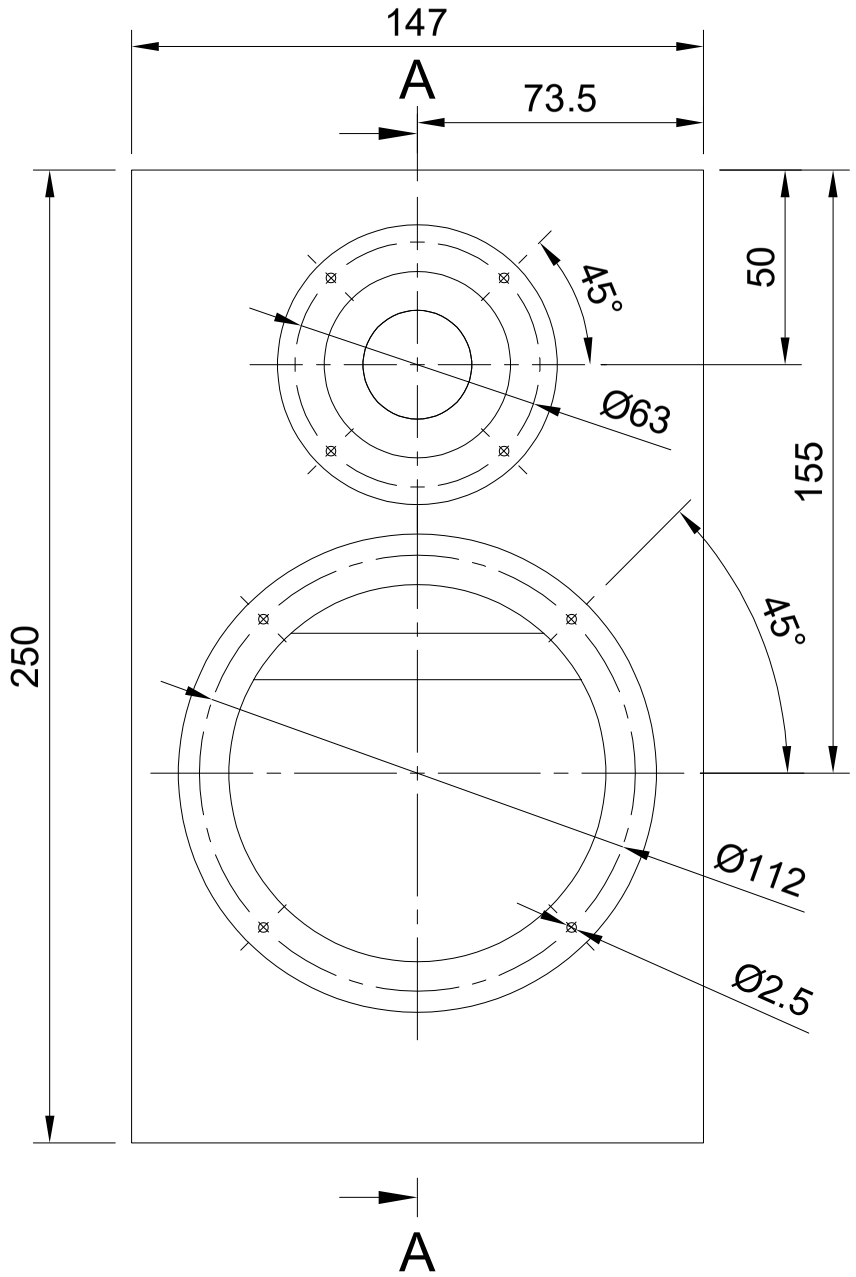

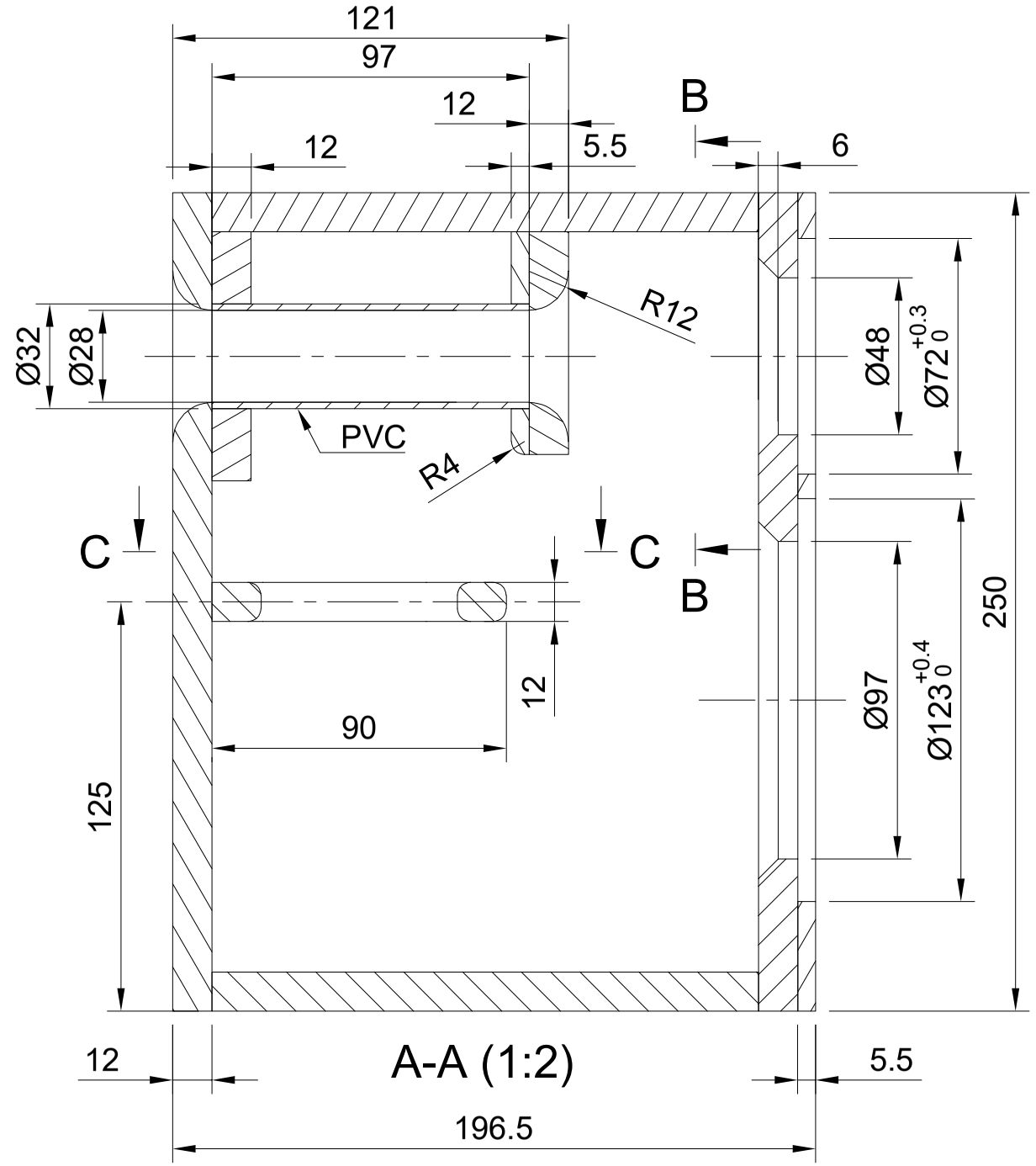

A-A (1:2)

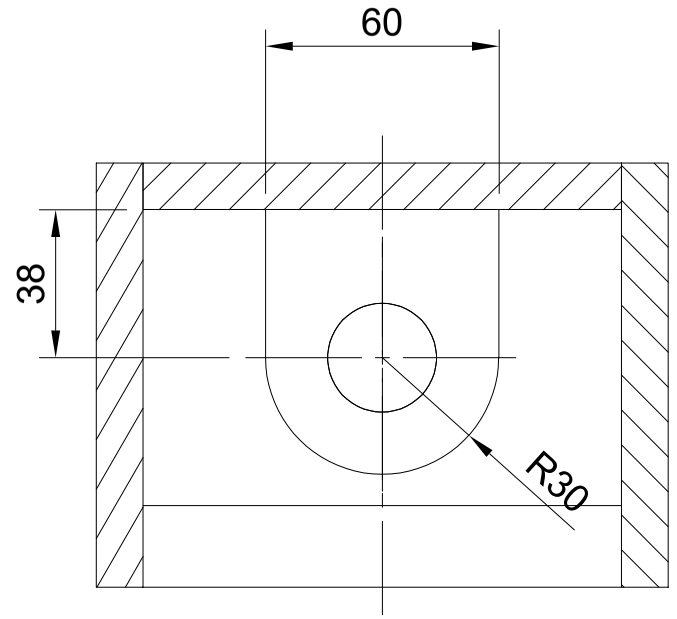

B-B (1:2)

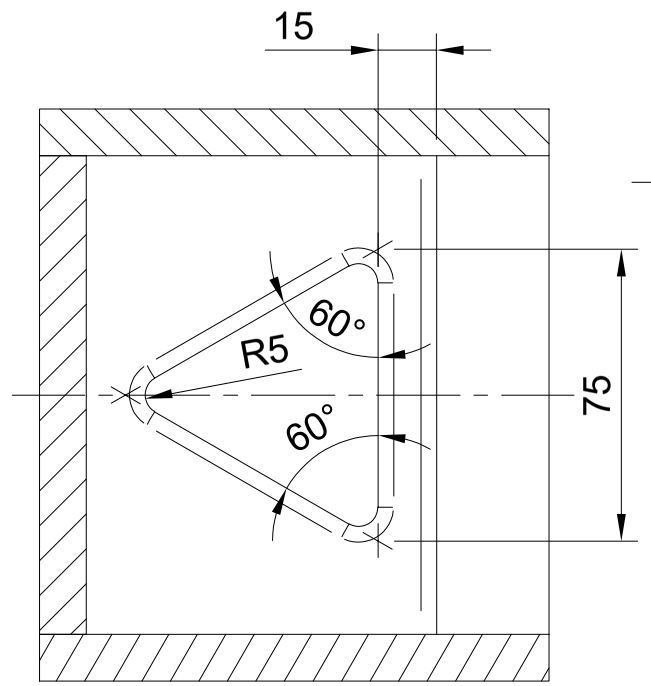

C-C (1:2)

Filter Components

Component:	Order Nr. Rumohl:
0.18mH 0.50mm Air Core Wire Coil Rdc 0,550 Ohm	000-1820
0.27mH Iron Core Coil 1.00mm Rdc 0,110 Ohm	000-2491
1.20mH Iron Core Coil 1.00mm Rdc 0,230 Ohm	000-2387
6.80uF 250V 5% ClarityCap PX	PX6u8J250V
5.60uF 250V 5% ClarityCap PX	PX5u6J250V
0.47 Ohm MOX 5W Metalized	002-0256
3.90 Ohm MOX 5W Metalized	002-0310
2.20 Ohm MOX 5W Metalized	002-0292
SB Acoustics SB12NRXF25-4	1382308
SB Acoustics SB26STCN-C000-4	1382325
BAF Wadding 50x70x3cm	1457158
Film Capacitor 10 uF 63 VDC 10%	MKS4C051005F00KH00

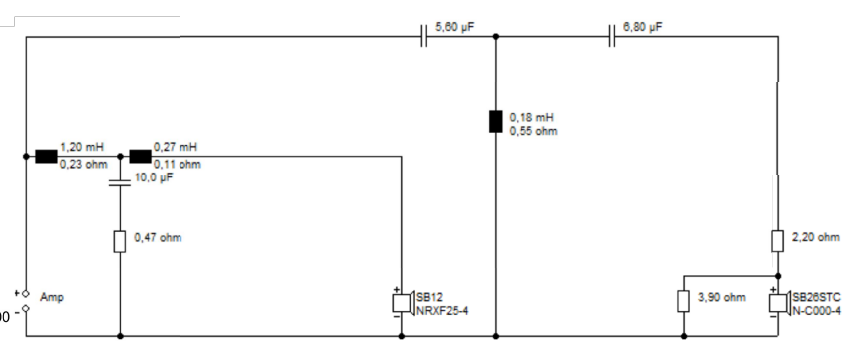

UNLESS OTHERWISE SPECIFIED:	Material:	Design By: Pappaleo	
DIMENSIONS: mm / degrees °	12 mm Berken Multiplex 5.5 mm Berken Multiplex	Drawn By: Tom Leijten	
LINEAIRE TOL: ± 0.5 mm		Sheet: 1/1	
ANGLES: ± 1°		Title: CALIMERO	
ROUGHNESS 6.3	Finish:		
TOM'S WERKPLAATS	Email: tom.leijten@gmail.com	Drawing Number: 2311291	Version: V1.2
Drawing Start Date: 29-11-2023	Scale: 1:2		
Approved Date: 04-12-2023			