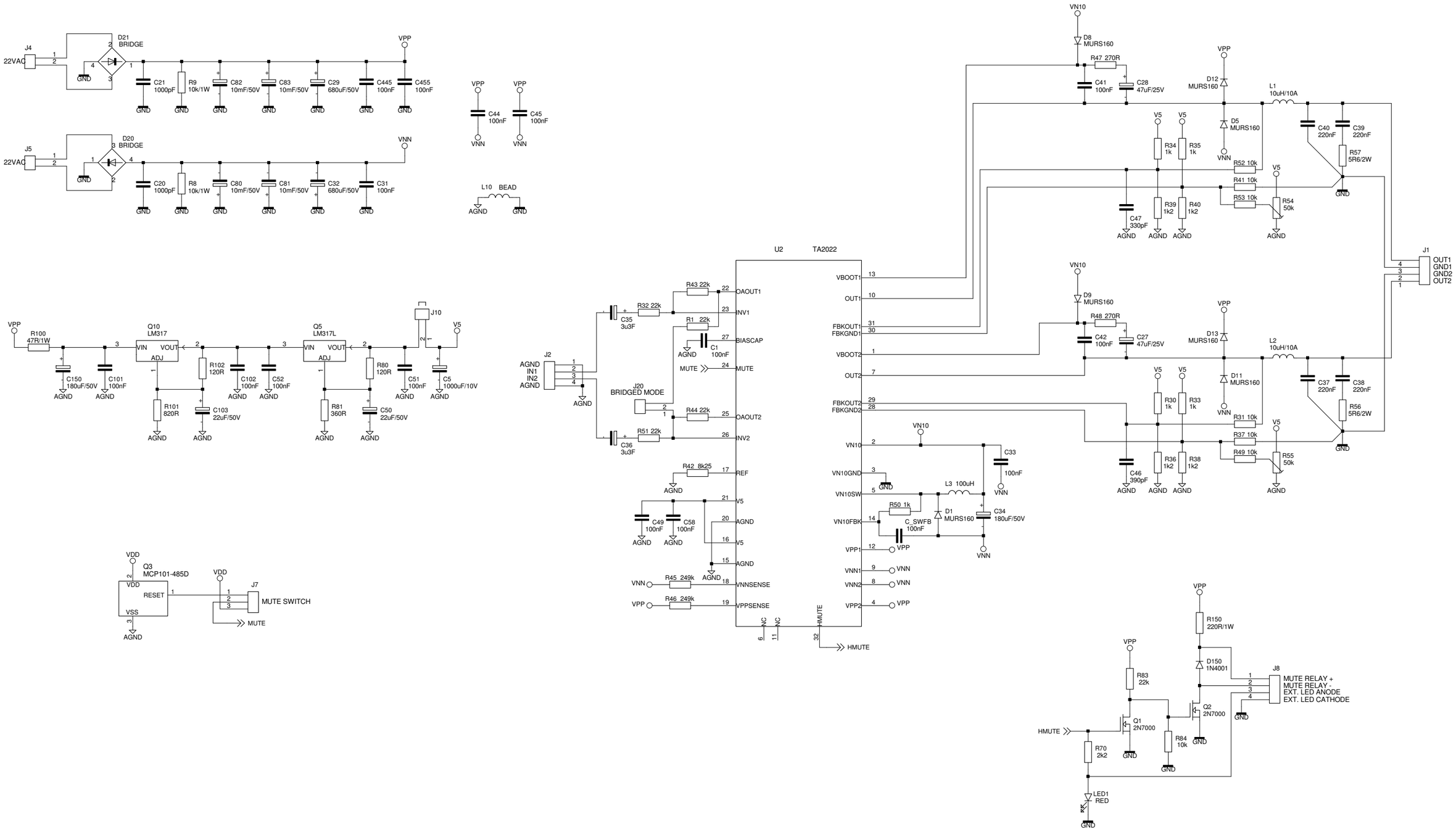

REV: 0	DATE: 12-18-2007	ENG: MARTIN VAN DEN BERG
PROJECT: AMP10 KIT - 41HZ.COM		
COMPANY: BERGRANS DIY AUDIO URL: HTTP://BERGRANS.DESPINNERIJ.NL E-MAIL: BERGRANS@XS4ALL.NL COUNTRY: THE NETHERLANDS		
INITIAL DEC 2007	PAGE: 1	OF: 1