SCH02_DIGITAL POWER

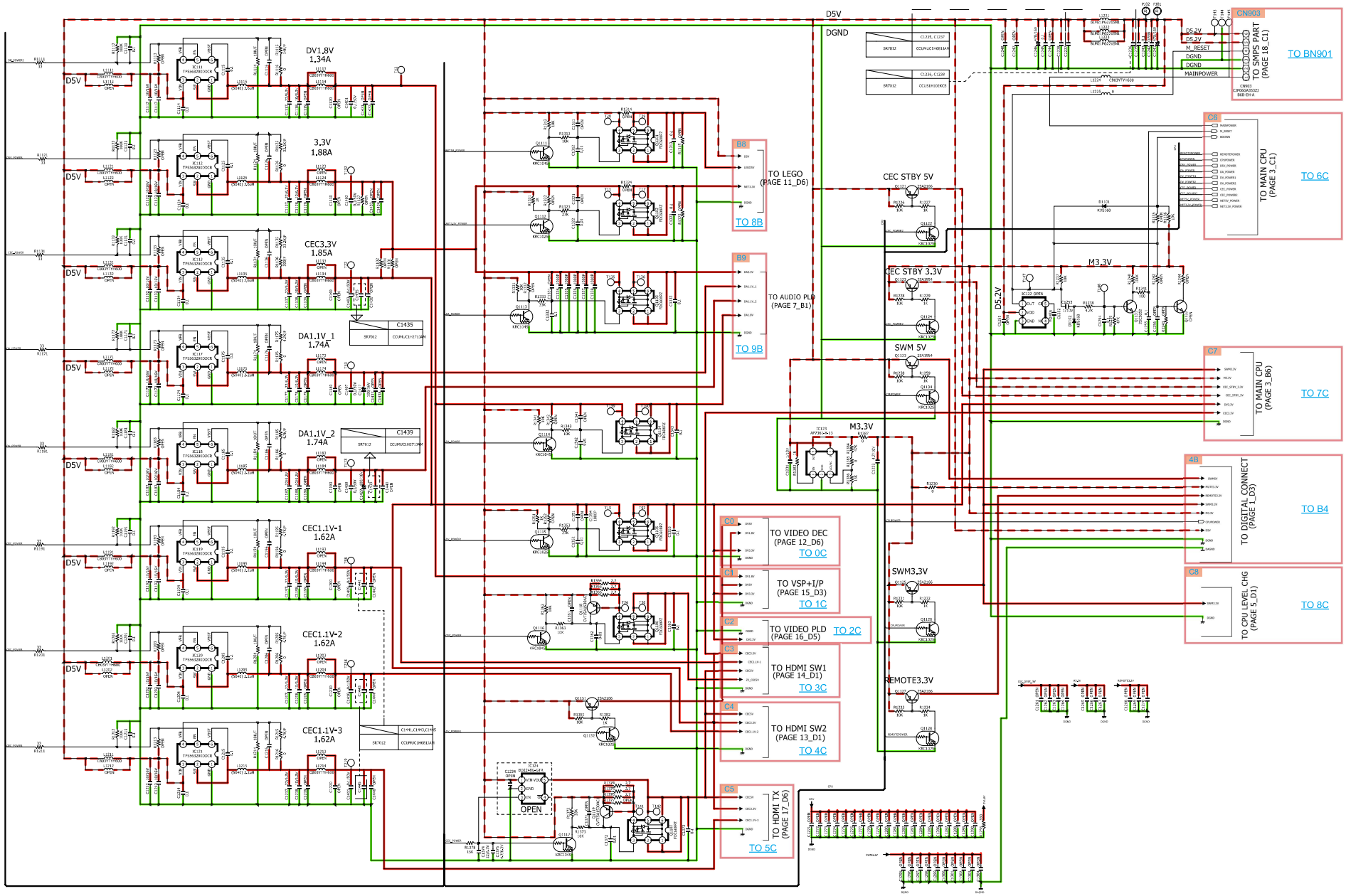

GND LINE | POWER+ LINE | POWER- LINE | ANALOG AUDIO | DIGITAL AUDIO | TMDS SIGNAL | ANALOG VIDEO | DIGITAL VIDEO | STBY POWER