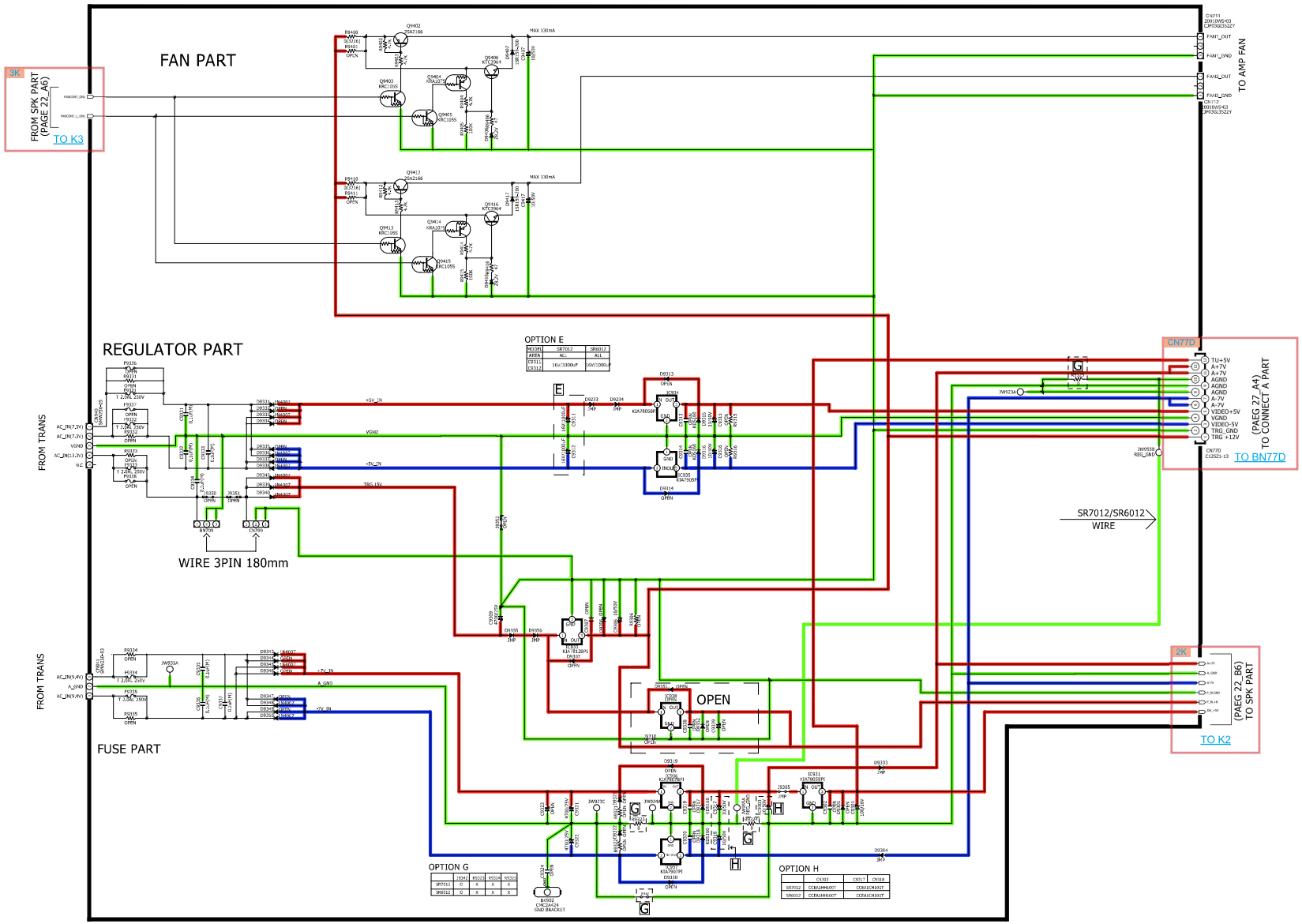

GND LINE POWER+ LINE POWER- LINE ANALOG AUDIO DIGITAL AUDIO TMDS SIGNAL ANALOG VIDEO DIGITAL VIDEO STBY POWER