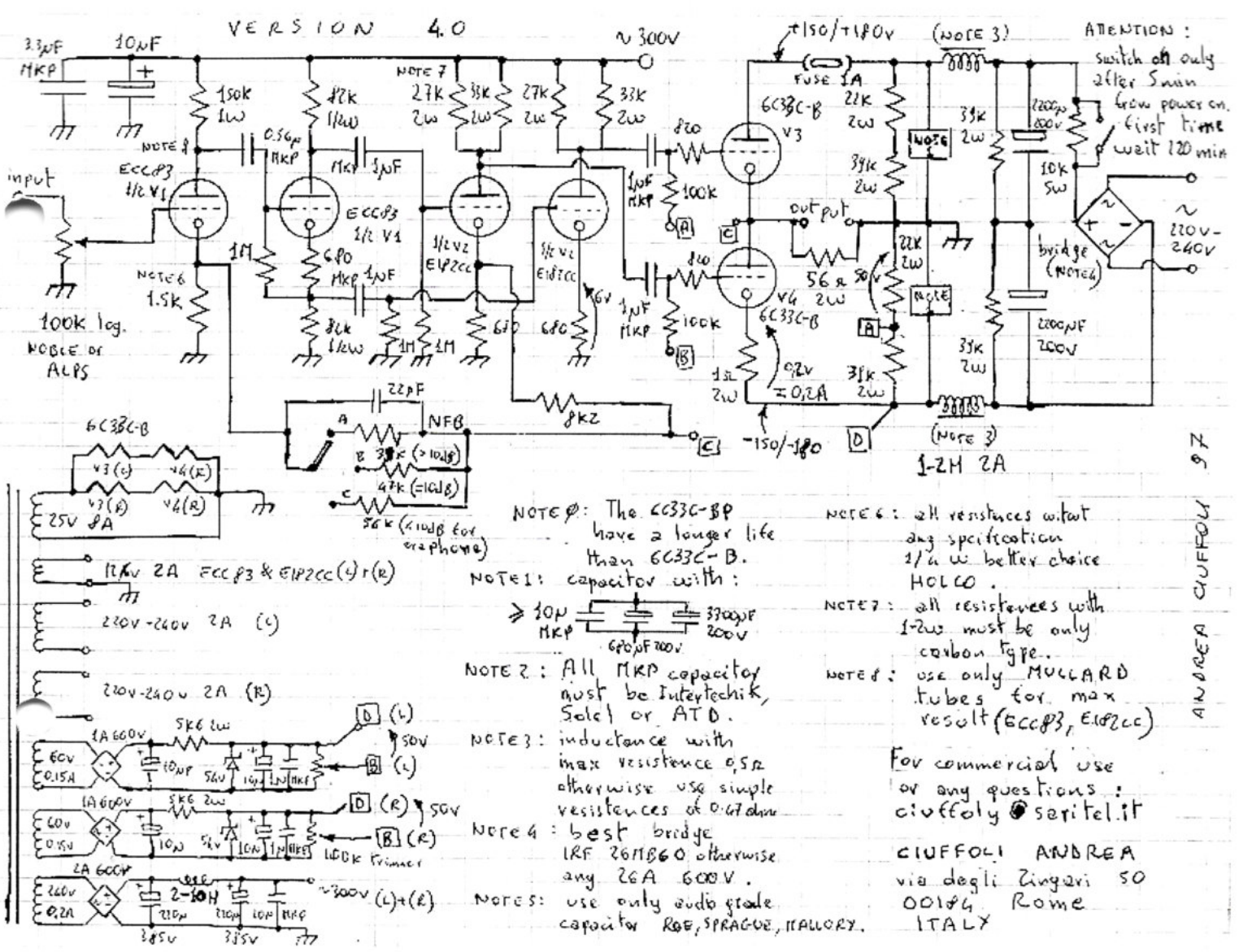

NOTE 0: The 6C33C-BP have a longer life than 6C33C-B.

NOTE 1: capacitor with:

≥ 10µ MKP — 3300pF 200V — 680pF 200V

NOTE 2: All MKP capacitor must be Intertechnik, Solcl or ATD.

NOTE 3: inductance with max resistence 0.5Ω otherwise use simple resistences of 0.47 ohm

Note 4: best bridge IRF 26MB60 otherwise any 26A 600V.

NOTE 5: use only audio grade capacitor ROE, SPRAGUE, MALLORY.

NOTE 6: all resistances without any specification 1/4 W better choice HOLCO.

NOTE 7: all resistances with 1-2W must be only carbon type.

NOTE 8: use only MULLARD tubes for max result (ECC83, EF22CC)

For commercial use or any questions: ciuffoly@seritel.it

CIUFFOLI ANDREA
via degli Zingari 50
00184 Rome
ITALY

ANDREA CIUFFOLI 97