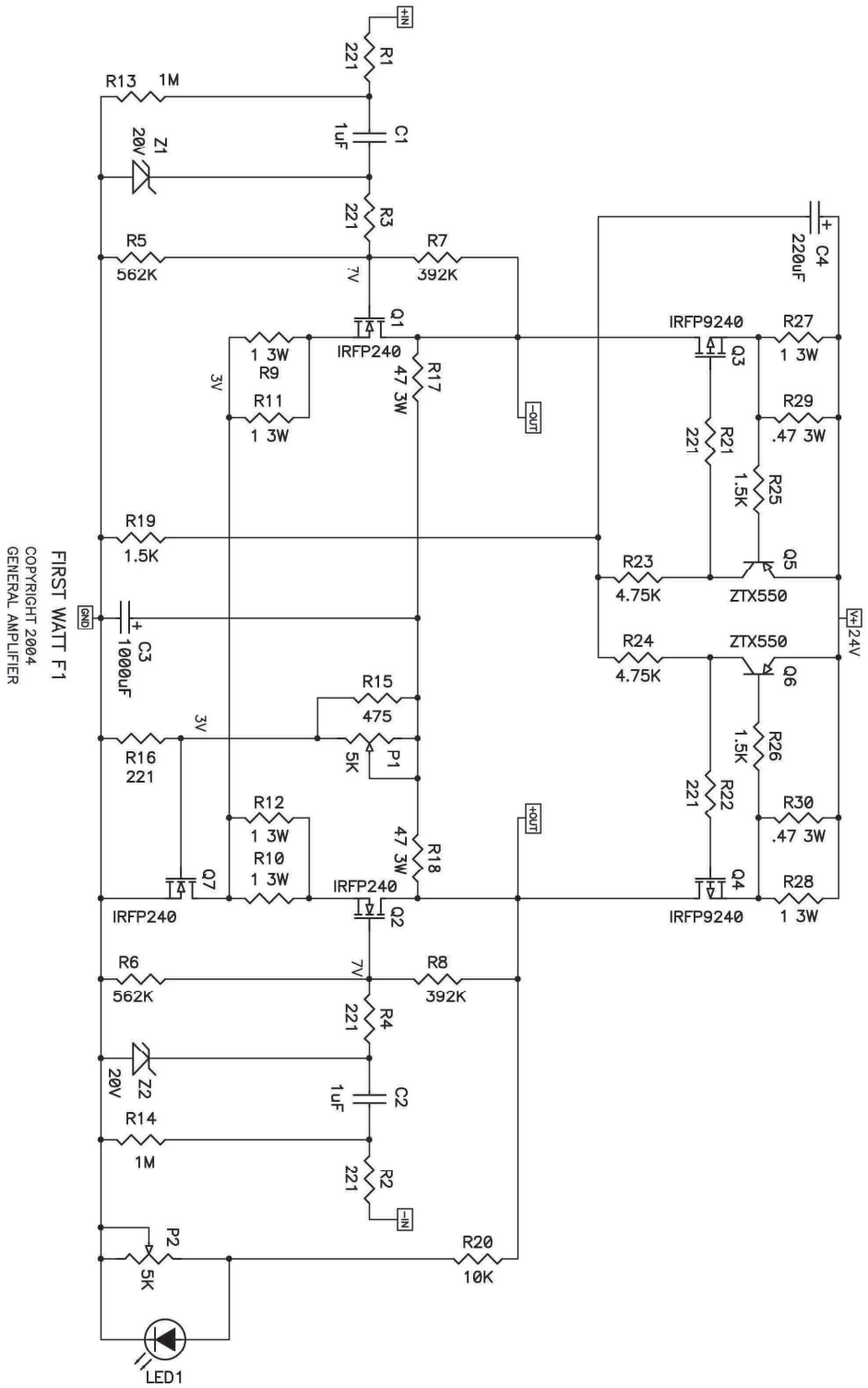

Here is the schematic of one channel of the real amplifier.