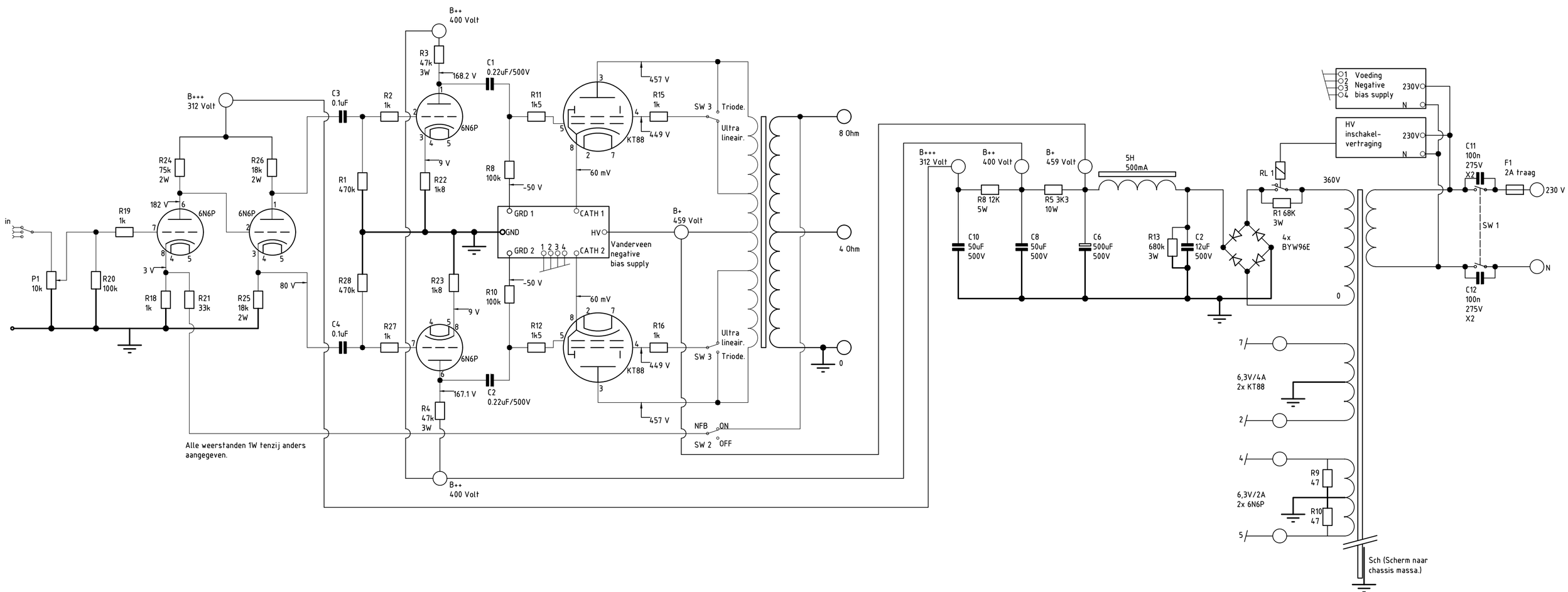
B++
400 Volt
R3
47k
3W
168.2 V
C1
0.22uF/500V
B+++
312 Volt
C3
0.1uF
R2
1k
6N6P
R11
1k5
457 V
R15
1k
SW 3
Triode.
Ultra
lineair.
KT88
449 V
8 Ohm
R24
75k
2W
R26
18k
2W
9 V
R22
1k8
R8
100k
-50 V
60 mV
182 V
R19
1k
6N6P
6N6P
R1
470k
GRD 1
CATH 1
GND
HV
GRD 2
CATH 2
1 2 3 4
Vanderveen
negative
bias supply
B+
459 Volt
4 Ohm
in
P1
10k
R20
100k
3 V
R18
1k
R21
33k
R25
18k
2W
80 V
R28
470k
R23
1k8
R10
100k
-50 V
60 mV
9 V
C4
0.1uF
R27
1k
R12
1k5
R16
1k
Ultra
lineair.
SW 3
Triode.
KT88
449 V
0
6N6P
167.1 V
C2
0.22uF/500V
R4
47k
3W
457 V
NFB
ON
SW 2
OFF
Alle weerstanden 1W tenzij anders
aangegeven.
B++
400 Volt
B+++
312 Volt
B++
400 Volt
B+
459 Volt
5H
500mA
R8 12K
5W
R5 3K3
10W
C10
50uF
500V
C8
50uF
500V
C6
500uF
500V
R13
680k
3W
C2
12uF
500V
4x
BYW96E
RL 1
R1 68K
3W
360V
0
1 Voeding
2 Negative
3 bias supply
4
230V
N
HV
inschakel-
vertraging
230V
N
C11
100n
275V
X2
F1
2A traag
230 V
SW 1
N
C12
100n
275V
X2
7
6,3V/4A
2x KT88
2
4
R9
47
6,3V/2A
2x 6N6P
R10
47
5
Sch (Scherm naar
chassis massa.)