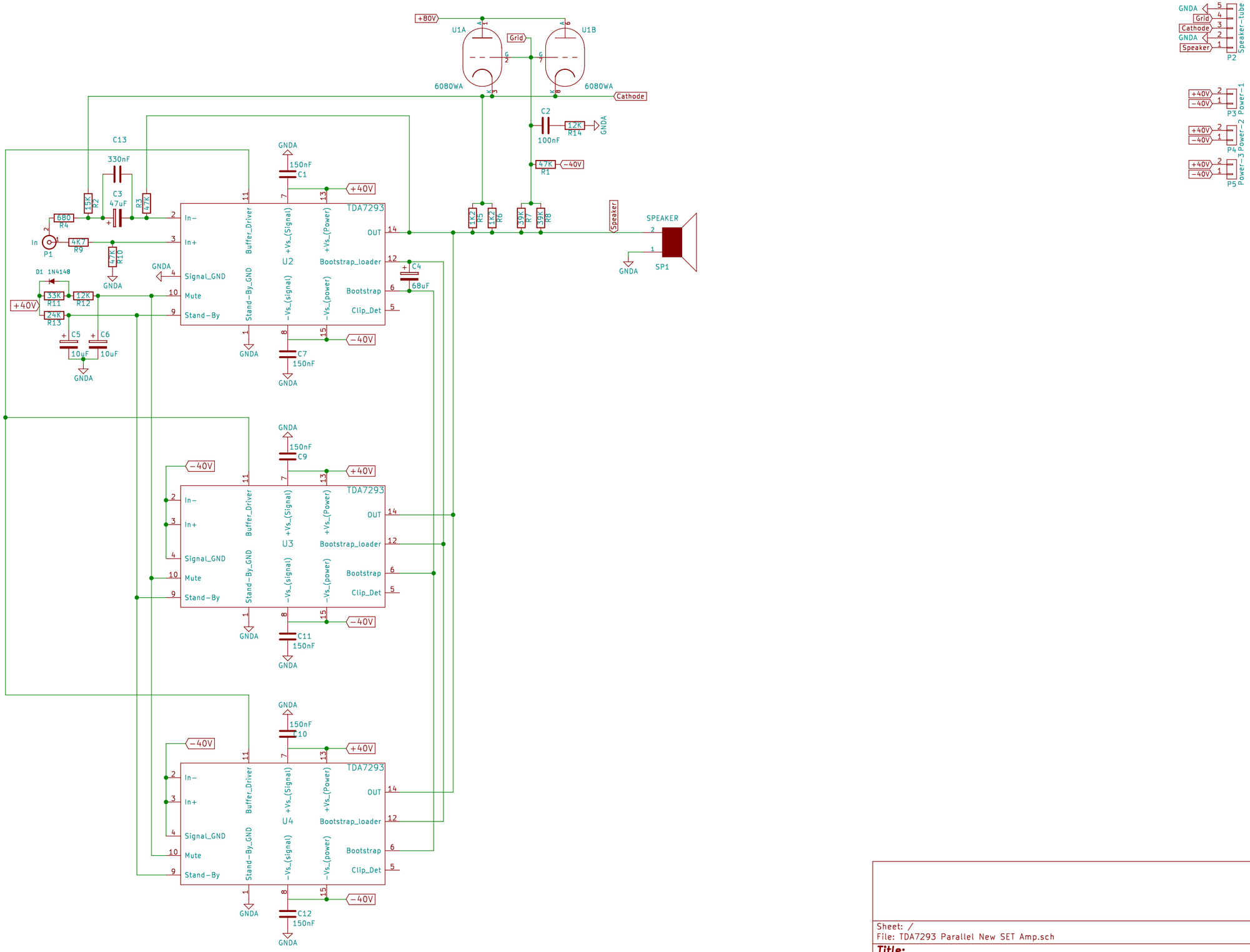

Sheet: /
File: TDA7293 Parallel New SET Amp.sch

Title:

Size: A3	Date:	Rev:
KiCad E.D.A. kicad (2015-08-05 BZR 6055, Git fa29c62)-product		Id: 1/1